Force on a Current-Carrying Conductor

Exam code: 0625 & 0972

Download PDF

Written by: Ashika
Reviewed by: Caroline Carroll
Updated on 10 February 2026

SaveMyExams

Did this video help you? Yes No

Help me understand

Force on a current-carrying conductor

- A current-carrying conductor produces its own **magnetic field**
  - When interacting with an external magnetic field, it therefore will experience a **force**
- A current-carrying conductor will only experience a force if the current through it is **perpendicular** to the direction of the magnetic field lines
  - A simple situation would be a copper rod placed within a uniform magnetic field
  - When current is passed through the copper rod, it experiences a force which makes it move

Stuck on something?

Ask questions and get help with exactly what you're revising.

Got it

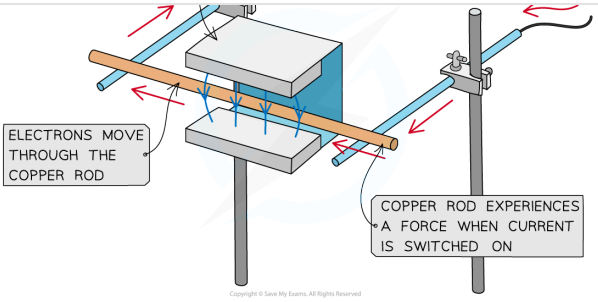

A copper rod moves within a magnetic field when current is passed through it

- Two ways to reverse the direction of the force (and therefore, the copper rod) are by:
  - reversing the direction of the **current**
  - reversing the direction of the **magnetic field**

Examiner Tips and Tricks

This phenomenon is sometimes referred to as 'the motor effect'. The direction of the force is determined by Fleming's left-hand rule.

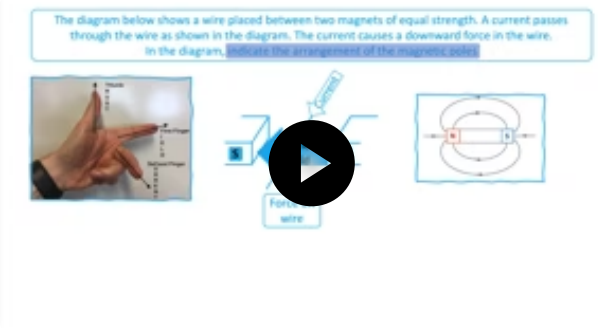

Did this video help you? Yes No

Flemings left-hand rule

- The **direction** of the **force** (aka the **thrust**) on a current-carrying wire depends on the direction of
  - the current
  - the magnetic field
- The direction of the force (or thrust) can be worked out by using **Fleming's left-hand rule**:
  - the **thumb** points in the direction of the force, or thrust, on the conductor

flow (from positive to negative)

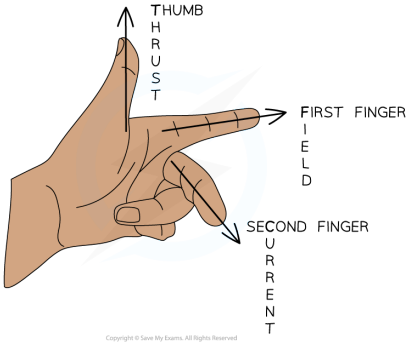

Fleming's left-hand rule can be used to determine the directions of the force, magnetic field and current

- All three will be **perpendicular** to each other in Fleming's left-hand rule questions
  - This means that sometimes the force could be into and out of the page (in 3D)

Worked Example

A current-carrying wire is placed into the magnetic field between the poles of the magnet, as shown in the diagram.

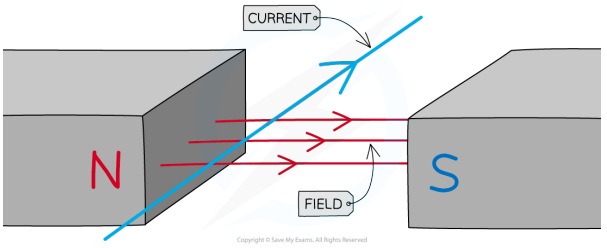

Use Fleming's left-hand rule to show that there will be a downward force acting on the wire.

Answer:

Step 1: Determine the direction of the magnetic field

- Start by pointing your **F**irst **F**inger in the direction of the (magnetic) **F**ield

Step 2: Determine the direction of the current

- Now rotate your hand around the first finger so that the se**C**ond finger points in the direction of the **C**urrent

Step 3: Determine the direction of the force

- The **TH**umb will now be pointing in the direction of the **TH**rust (the force)

Examiner Tips and Tricks

Remember that the magnetic field is always in the direction from **North** to **South** and current is always in the direction of a **positive** terminal to a **negative** terminal.

Feel free to use Fleming's left hand rule in your exam, just don't make it too distracting for other students!

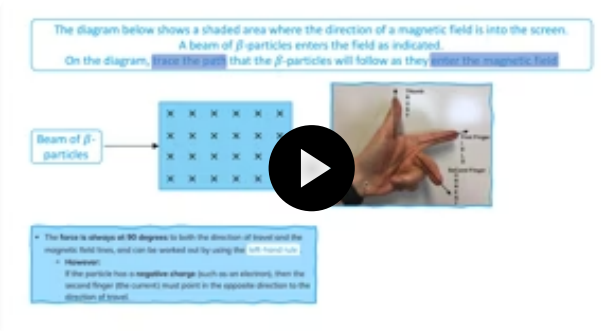

Did this video help you? Yes No

Charged particles in a magnetic field

Extended tier only

- When a current-carrying wire is placed in a magnetic field, it will experience a force if the wire is perpendicular
  - This is because the magnetic field exerts a force on each individual electron flowing through the wire
- Therefore, when a charged particle passes through a magnetic field, the field can exert a **force** on the particle, causing it to **deflect**
  - The force is always at **90 degrees** to both the direction of travel and the magnetic field lines

- In the case of an electron in a magnetic field
  - the second finger (current) points in the opposite direction to the direction of motion
  - this is because conventional current flows in the opposite direction to electron flow

When a charged particle (such as an electron) enters a magnetic field, it is deflected by the field

- If the particle is travelling **perpendicular** to the field lines:
  - it will experience the **maximum** force
- If the particle is travelling **parallel** to the field lines:
  - it will experience **no** force
- If the particle is travelling at an **angle** to the field lines:
  - it will experience a **small** force

Examiner Tips and Tricks

Remember that the direction of **current** is the direction of **positive** charged. Therefore, if a particle has a negative charge (such as an electron), then the second finger (current) must point in the **opposite** direction to its direction of travel.

The left-hand rule can be applied to any charged particles, but in the IGCSE exam questions are likely to stick to electrons.

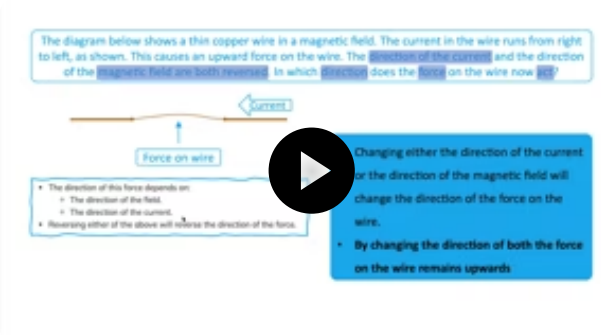

Teacher only

New! Exclusive Teacher-Only Questions

- Fresh, expert-written questions
- Students can't access them
- Fair accurate tests - built fast

Explore in Test Builder

Test yourself

Flashcards

Was this revision note helpful? Yes No

Previous

Next

Course

Study tools

All topics

Terms
Privacy
Cookie Policy
Help and Support
English Literature
Psychology
All Subjects

© Copyright 2015–2026 Save My Exams Ltd. All Rights Reserved.
Neither IBO nor College Board were involved in the production of, and do not endorse, the resources created by Save My Exams.